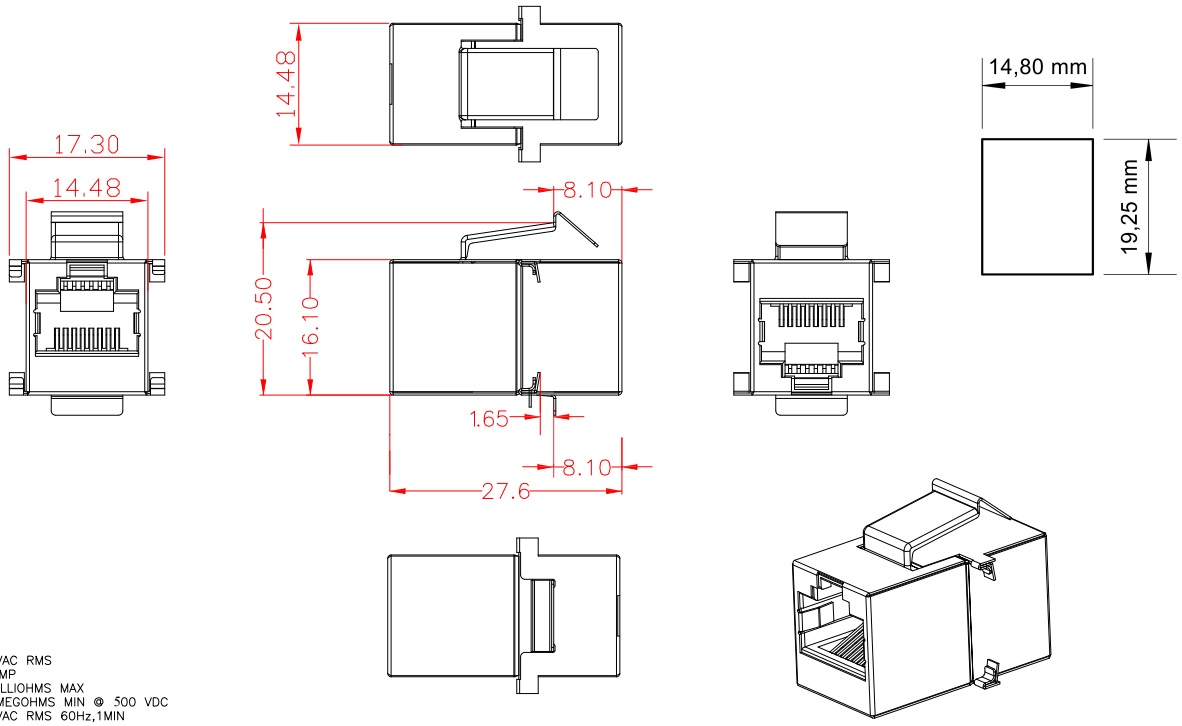

NOTES:
ELECTRICAL:
1. VOLTAGE RATING : 125 VAC RMS
2. CURRENT RATING : 1.5 AMP
3. CONTACT RESISTANCE : 20 MILLIOHMS MAX
4. INSULATION RESISTANCE: 1000MEGOHMS MIN @ 500 VDC
5. DIELECTRIC STRENGTH : 750 VAC RMS 60Hz,1MIN
ENVIRONMENTAL:
1. STORAGE : −40°TO+85°
2. OPERATION : −10°TO+70°
MATES WITH MODULAR PLUG CONFORMING TO FCC PART 68, SUBPART F
MECHANICAL:
1.SHIELD MATERIAL : STAINLESS STEEL, T=0.25mm
2.HOUSING MATERIAL: PBT+20%.GF
3.INSERT MATERIAL : PBT+20%.GF
4.CONTACT MATERIAL: PHOSPHOR BRONZE STAMP PIN T=0.35mm
5.RJ45 JACK LIFE : 750 TIMES MIN
6.Retentiveness of insertion structure: 50N ±5s

SYM	Number	Bill No. of Alteration	EP Signature	06.05.2021 Date
Drawn	Ding jian bo	2020.08.10	Tolerance	
Checked	Ge pei jun	2020.08.10	0.00~20.00 ±0.10; 20.00~50.00 ±0.15; 50.00~100.00 ±0.20; 100.00~ ±0.25; Angle ±30'	
Approved	Wang wei jun	2020.08.10		

KEYSTONE ADAPTER RJ45/RJ45 (37508.1/37508.1V2)

CPN	37508.1V3			Item No.	
Angles Projection	Size	Scale	Unit	Part Name	EFB ELEKTRONIK
	A4	X:1	mm		
Sheet	1 OF 1	Version: A/0		ERP Part No.	

Side mark

ITEM NO.: 37508.1V3
PO NO.:992002623 As per po
Q'TY.: 1000 PCS
N.W.: 9.3 KGS
G.W.: 10.3 KGS
MEAS:43X34X18 CM

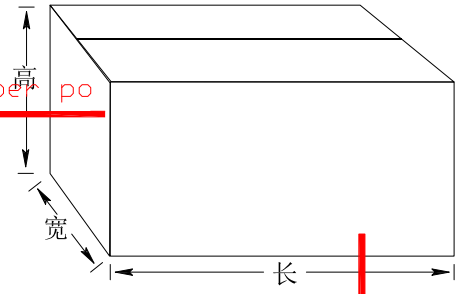

100pcs/blister

37508.1V3
RJ45 Adapter Snap-in Buchse/Bu
100Stück
MADE IN CHINA
EFB-Elektronik GmbH
Striegauer Str. 1
33719 Bielefeld
4049759213312

SIZE: 45X52MM

Shipping mark

EFB

SYM	Number	Bill No. of Alteration	Signature	Date
Drawn	Ding jian bo	2020.08.10	Tolerance	
Checked	Ge pei jun	2020.08.10	0.00~20.00 ±0.10; 20.00~50.00 ±0.15; 50.00~100.00 ±0.20; 100.00~ ±0.25; Angle ±30'	
Approved	Wang wei jun	2020.08.10		

CPN	37508.1V3			Item No.	
Angles Projection	Size	Scale	Unit	Part Name	Keystone Jack
	A4	X:1	mm		
Sheet	1 OF 1	Version: A/0		ERP Part No.	